TECHNICAL SHEET **BIXACTA AXIS 13**

Adjustable hinge for entrance doors in aluminum, PVC and wood

cod. **CI483160P303**

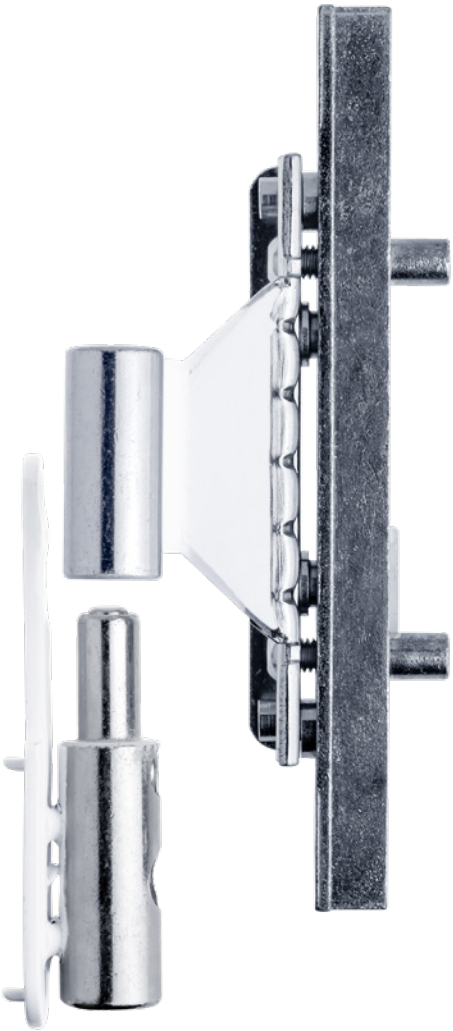

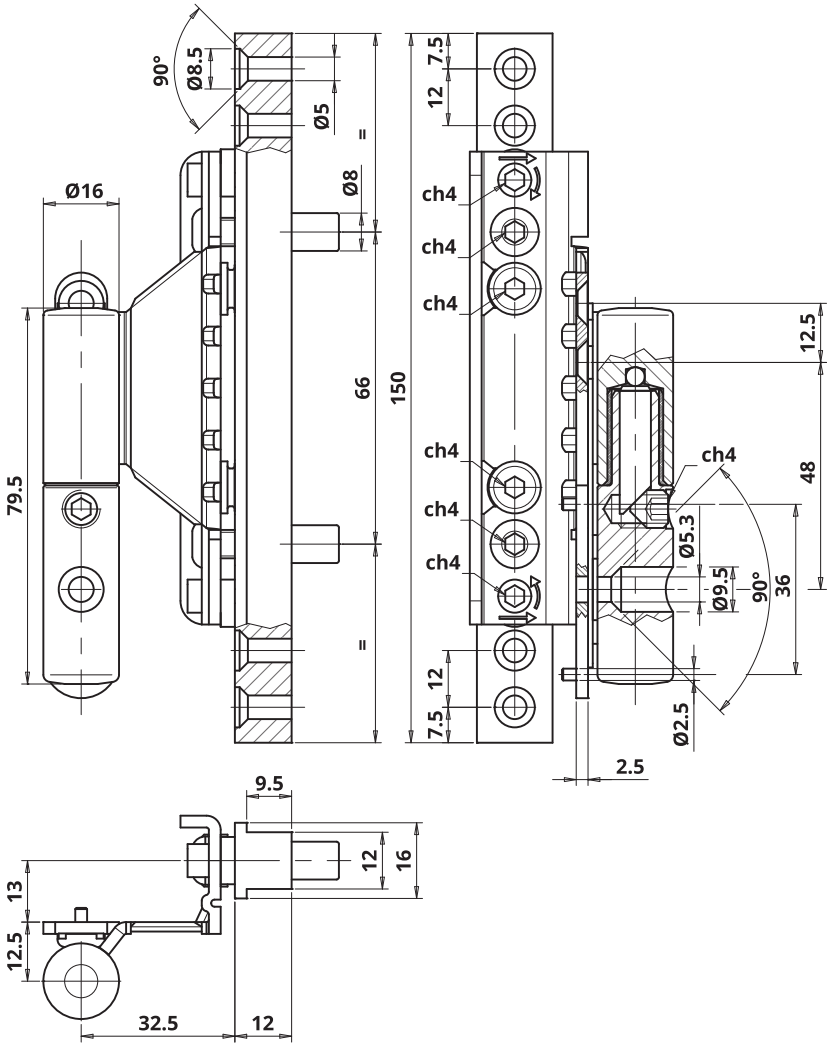

Technical features

- The hinge is suitable for profiles with European fitting groove with 13 mm axis, which is widely used in the world of aluminum, but also in wooden and PVC frames.
- Inserting the hinge directly into the hardware groove ensures stability and high loading capacities.
- Equipped with 3-way adjustments that can be settled by means of just one 4 mm hex-spanner.
- Door opening DIN left.
- Door opening angle 180°.
- CE certified

Technical data

Capacity*	80 Kg.
Side adjustment	± 3 mm
Height adjustment	± 5 mm
Depth adjustment	± 1,5 mm

* Tested with 90x210 cm doors according UNI EN1935:2004 norm - For more information on the number of hinges to be used according to the weight and dimension of the door, please see the loading charts available on the website www.otlav.it.

Accessories

A wide range of caps for covering the hinge available in different styles, finishes and materials: ABS, aluminum, solid brass.

Finishing

White plastified (RAL 9016)	P3

OTLAV S.p.A. - Via Angelo Padovan, 2 / P.O. Box 64 - 31025 S. Lucia di Piave (TV) – Italy - T +39 0438 4611 - F +39 0438 439252 - www.otlav.it